TITAN T3 Rotary 3 Spark
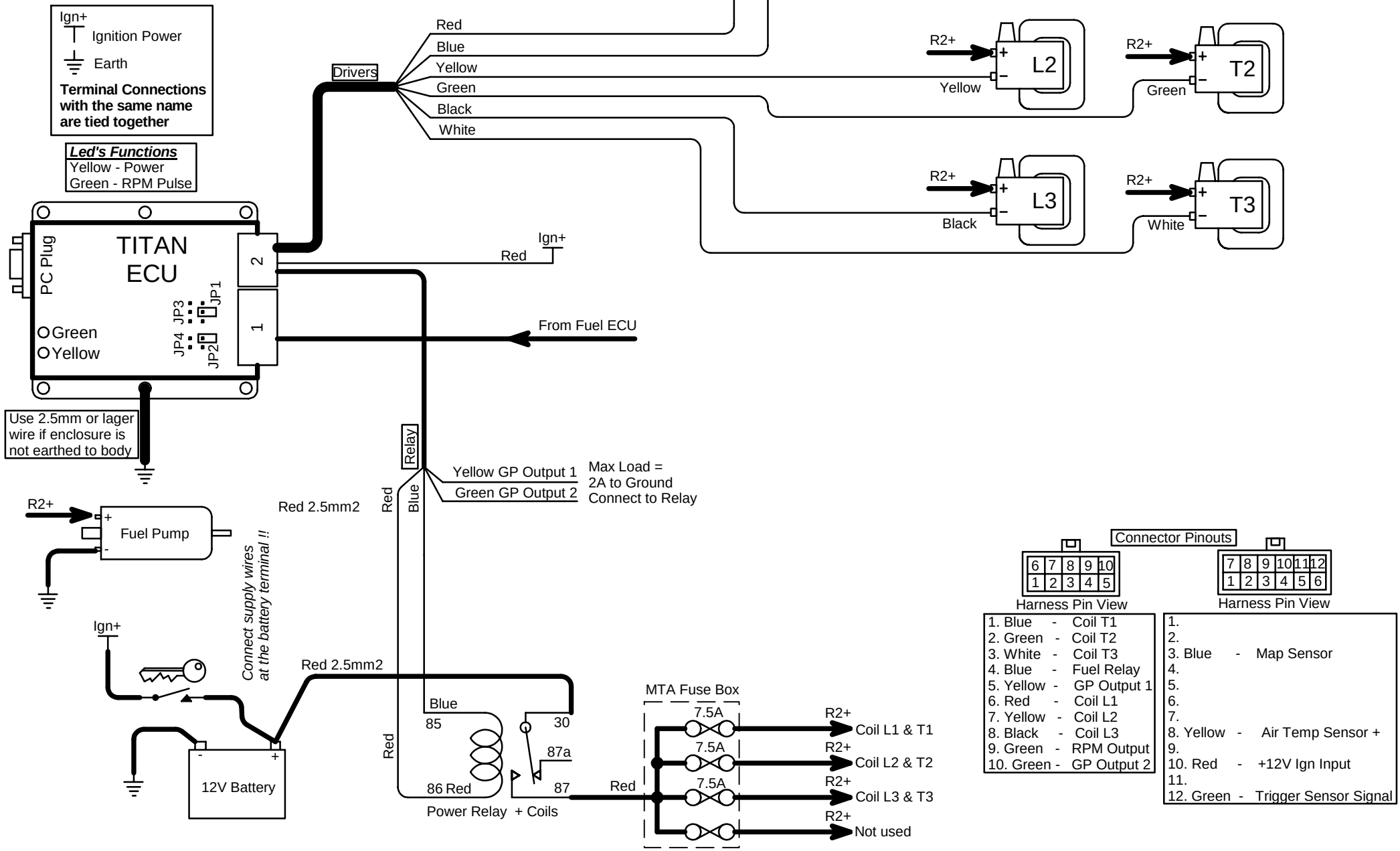
Harness Required: E25 Ver 1.0 & E21 Ver 1.0
Last Changed: 14/03/2011
Drawing Ver: 1.0